LAFERTGROUP
Member of Sumitomo Drive Technologies

PAD MOUNTING SERIES

AXIAL FANS APPLICATIONS

BROCHURE 2023

IE3 IE4 IE5

CUSTOMIZATION AT ALL LEVELS

The quality of Lafert motors is generated by the constant search for innovative solutions and from our natural propensity for customization and co-engineering. Lafert specializes in designing and manufacturing customized electric motors and drives, created to meet the needs of each customer. **More than 90% of Lafert products are non-standard motors.**

Thanks to our strong approach to the market, experience in special applications and the wide range of solutions, we can offer the electric and mechanical design perfect for every application need. The co-designing approach from our engineers and the skillful expertise of our technical office to adapt the motor to specific market segments allow us to offer an exceptionally high level of customization, efficiency, and reliability.

To ensure the maximum performance of our motors we produce every component internally. This allows us to tailor every element of our proposals by developing **infinite solutions for all applications**.

From flange design to special windings, from the degree of protection to the fan cooling, we customize everything to create the perfect motor that maximizes the performance and energy savings of the final application.

PAD MOUNTING SERIES

The pad mounting series stems from the desire to meet the application needs of axial fans where the mounting of motors with reduced dimensions and without protruding elements allows to minimize the impact on the air flow thus ensuring a reduction in energy consumption. The pad mounting design, in fact, uses four special feet that are fixed at 90 ° on the motor body minimizing the impact on the air flow, making the system more efficient and performing.

We have developed a whole range of feet for pad mount fixing on IEC mechanics, from size 80 to 160 to meet all applications. We can therefore offer with pad mounting design both asynchronous motors in efficiency class IE1, IE2 and IE3 and synchronous permanent magnet motors with IE4 and IE5 efficiency, with considerable advantage for the customer who can without any redesign of his machine switch to a solution with higher efficiency.

TARGET APPLICATIONS

HVAC	MAIN FEATURES
AXIAL FANS FOR INDUSTRIAL AND COMMERCIAL ENVIRONMENT	• IEC design – 80 to 160 frame size • Asynchronous and synchronous PM design • Pad mounting design • Without ventilation (IC418 – TEAO design) • High corrosion protection level (according to ISO 12944) • Special insulation system/voltage/frequency • Wide ambient temperature range

INTERNATIONAL EFFICENCY LEVEL IE CODE

The International Standard IEC 60034-30-1;2014 ensures a common base for electric motor designing and classification, as well as for national legislative activities, increasing the level of harmonization in **MEPS** (Minimum Energy Performance Standard) all over the world.
The IEC 60034-30-1 states the efficiency levels (IE codes) and requirements and provides test conditions and efficiency measurement methods specified in **IEC 60034-2-1;2014**.
It doesn't state the minimum efficiency level (MEPS). This depends on any national legislative activities and government targets to save energy.

IE3	IE4	IE5
Premium Efficiency	Super-Premium Efficiency	Ultra-Premium Efficiency

EUROPE: ECODESIGN REGULATION EU 2019/1781 AND AMENDMENT EU 2021/341

The Ecodesign Directive 2009/125/EC establishes, across the EU, a framework for setting eco-design requirements for energy-related products. It is a key instrument of EU policy for improving the energy efficiency and other aspects of the environmental performance of products placed on the market.

Requirements for the eco-design of electric motors and the use of variable speed drives were set out in Regulation (EC) 640/2009 on 22nd July 2009 then amended by Regulation (EU) 4/2014 on 6th January 2014. This regulation was superseded on 25th October 2019 by Regulation (EU) 2019/1781, which sets out new statutory requirements for motors and drives.

The Regulation EU 2019/1781 and Amendment EU 2021/341 specify efficiency requirements for single speed three-phase motors from 0.12 to 1000kW, 2, 4, 6 and 8 poles, 50 Hz, 60 Hz and 50/60 Hz, and introduce in all UE countries the following MEPS:

SECOND STEP: AS OF 1ST JULY 2023

IE2 level: 0.12 to 0.55 kW

IE2 level: 0.12 to 1.000 kW
(All Ex motors, Single-phase motors)

IE3 level: 0.75 to 1.000 kW

IE4 level: 75 to 200 kW

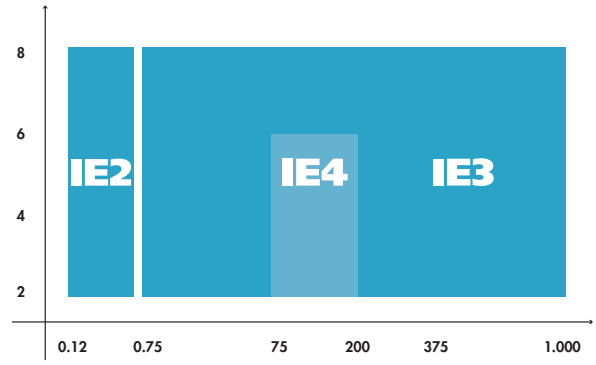

REGULATION SCOPE

- Three-phase single speed motors
- 0.12kW to1000kW
- 2,4,6 and 8 poles
- 50 Hz, 60 Hz, 50/60 Hz
- Continuous duty operation (S1, S3>80%, S6>80%)
- Brake motors
- IC411 (TEFC) and IC418 (TEAO) design
- Ex motors (excluded Ex eb)

EXCLUSIONS

- Non continuous duty motors (duty<80%)
- IC410 (TENV) design
- Motors above +60°C and below -30°C

ULTRA PREMIUM EFFICIENCY PM MOTORS – IE5

EFFICIENCY LEVEL ACCORDING TO IEC TS 60034-30-2:2016

FOR MAINS VOLTAGE
400 V - 50 HZ

IE5

TEMPERATURE RISE TO CLASS B

Type	Size	n rpm	P_n kW	M_N Nm	M_{pk} Nm	K_e Vs	K_t Nm/A	E_n Vrs	I_n Arms	η* %	kg
1500 rpm											
HPS90 1500 32	S-L	1500	1.5	9.6	28.7	1.73	3	272	3.2	89.1	14
HPS90 1500 47	S-L	1500	2.2	14.0	42.0	1.73	3	272	4.7	90.2	14
HPS90 1500 64	XL	1500	3	19.1	57.3	1.73	3	272	6.4	91.0	18
HPS90 1500 85	XL	1500	4	25.5	76.4	1.73	3	272	8.5	91.8	19
HPS112 1500 85	M	1500	4	25.5	76.4	1.73	3	272	8.5	91.8	26
HPS112 1500 117	M	1500	5.5	35.0	105.1	1.73	3	272	11.7	92.5	30
HPS112 1500 159	XL	1500	7.5	47.8	143.3	1.73	3	272	15.9	93.2	33
HPS112 1500 195	XL	1500	9.2	58.6	175.8	1.73	3	272	19.5	93.5	33
HPS132 1500 233	XL	1500	11	70.0	210.1	1.73	3	272	23.3	93.8	56
HPS132 1500 318	XXL	1500	15	95.5	286.5	1.73	3	272	31.8	94.4	65
HPS132 1500 393	XXL	1500	18.5	117.8	353.4	1.73	3	272	39.3	94.6	65
HPS160 1500 233	M	1500	11	70	175	1.73	3	272	23.3	93.8	70
HPS160 1500 318	M	1500	15	95	239	1.73	3	272	31.8	94.4	75
HPS160 1500 393	M	1500	18.5	118	294	1.73	3	272	39.3	94.6	85
HPS160 1500 467	L	1500	22	140	350	1.73	3	272	46.7	94.9	95
HPS160 1500 637	L	1500	30	191	477	1.73	3	272	63.7	95.3	115
3000 rpm											
HPS90 3000 47	S-L	3000	2.2	7.0	21.0	0.87	1.5	272	4.7	88.9	10
HPS90 3000 64	S-L	3000	3	9.6	28.7	0.87	1.5	272	6.4	89.9	12
HPS90 3000 85	S-L	3000	4	12.7	38.2	0.87	1.5	272	8.5	90.7	14
HPS90 3000 117	S-L	3000	5.5	17.5	52.5	0.87	1.5	272	11.7	91.6	16
HPS112 3000 117	M	3000	5.5	17.5	52.5	0.87	1.5	272	11.7	91.6	23
HPS112 3000 159	M	3000	7.5	23.9	71.6	0.87	1.5	272	15.9	92.4	26
HPS112 3000 233	M	3000	11	35.0	105.1	0.87	1.5	272	23.3	93.2	30
HPS112 3000 318	M	3000	15	47.8	143.3	0.87	1.5	272	31.8	93.7	33
HPS132 3000 318	M	3000	15	47.8	143.3	0.87	1.5	272	31.8	93.7	55
HPS132 3000 393	XL	3000	18.5	58.9	176.7	0.87	1.5	272	39.3	94.2	59
HPS132 3000 467	XXL	3000	22	70.0	210.1	0.87	1.5	272	46.7	94.4	67
HPS132 3000 636	XXL	3000	30	95.4	286.0	0.87	1.5	272	63.6	94.9	72
HPS160 3000 634	L	3000	30	95.4	239	0.87	1.51	272	63.4	94.9	90
HPS160 3000 782	L	3000	37	118.0	294	0.87	1.51	272	78.2	95.2	95

* In new IEC TS 60034-30-2, the IE class limit values are reduced by adding the additional harmonic losses caused by the drive: 15% additional losses for motors up to 90 kW

PREMIUM EFFICIENCY THREE-PHASE MOTORS – IE3

EFFICIENCY LEVEL ACCORDING TO IEC 60034-30-1;2014 | EFFICIENCY TESTING METHOD IEC 60034-2-1;2014
NOMINAL FULL LOAD EFFICIENCY ACCORDING TO IE3 CODE @ 400 V - 50 HZ

FOR MAINS VOLTAGE
400 V - 50 HZ

IE3

TEMPERATURE RISE TO CLASS B

Type		kW	HP	n rpm	M_N Nm	η 50%	η 75%	η 100%	cos φ	I_N 400V	I_A/I_N	M_A/M_N	M_S/M_N	M_K/M_N	J 10^{-3} kgm²	kg
3000 rpm (2 poles)																
AMPE 80Z AA	**2**	0.75	1	2910	2.5	77.8	81.2	82.0	0.78	1.7	8.9	4.7	4.5	4.8	0.7	9.5
AMPE 80Z BA	**2**	1.1	1.5	2870	3.7	78.7	81.7	82.7	0.76	2.4	9.3	5.0	4.9	5.3	0.9	11.1
AMPE 80Z CA	**2***	1.5	2	2810	5.1	78.8	82.2	84.2	0.76	3.6	7.8	4.9	3.7	4.3	1.1	13.5
AMPE 90S AA	**2**	1.5	2	2875	5.0	83.2	84.8	84.2	0.85	3.0	8.4	3.6	3.2	3.8	1.56	14.0
AMPE 90L BA	**2**	2.2	3	2880	7.3	85.0	86.2	86.5	0.82	4.6	9.2	4.0	3.8	4.2	1.8	16.0
AMPE 90L DA	**2***	3	4	2865	10.0	85.2	86.3	87.1	0.80	6.3	8.7	4.5	4.0	4.6	2.0	18.0
AMPE 112M XA2	**2**	3	4	2940	10.0	85.2	86.3	87.1	0.89	5.5	10.0	3.8	3.2	4.2	6.48	27.4
AMPE 112M AA	**2**	4	5.5	2910	13.1	86.8	87.8	88.1	0.93	7.0	9.6	3.6	3.0	4.0	6.48	27.4
AMPE 112M BA	**2**	5.5	7.5	2935	17.9	85.6	88.3	89.2	0.87	10.2	11.2	4.2	3.5	4.3	8.6	33.6
AMPE 112M CA	**2**	7.5	10	2930	24.5	88.0	89.7	90.1	0.84	14.4	10.4	4.5	3.5	4.6	10.5	36.0
AMPE 132S ZA	**2**	5.5	7.5	2920	18.0	88.0	88.5	89.2	0.90	10.0	8.9	3.0	2.5	3.6	14.0	46.0
AMPE 132S TA	**2**	7.5	10	2910	24.6	88.6	89.2	90.1	0.92	13.1	8.9	3.0	2.6	3.6	16.0	53.0
AMPE 132M ZA	**2**	9.2	12.4	2930	30.0	88.6	89.8	90.7	0.89	16.5	10.1	3.7	3.3	4.0	17.5	58.0
AMPE 132M RA	**2**	11	15	2935	35.8	90.0	90.8	91.2	0.89	19.9	9.7	4.4	3.5	4.6	25.0	59.0
AMPE 132M TA	**2**	15	20	2915	49.2	91.0	92.2	91.9	0.88	26.8	9.6	3.7	2.6	3.8	28.0	68.0
AMPE 160M YA	**2**	11	15	2950	35.6	87.4	89.8	91.2	0.89	19.7	9.1	4.0	3.0	4.2	51.7	87.8
AMPE 160M ZA	**2**	15	20	2940	48.7	91.0	91.3	91.9	0.89	26.7	9.7	4.7	3.5	4.8	53.4	88.9
AMPE 160L ZA	**2**	18.5	25	2950	59.9	91.6	92.8	92.4	0.88	33.0	10.7	4.6	3.1	4.7	64.0	104.0
AMPE 160L TA	**2**	22	30	2950	71.3	92.2	93.7	92.7	0.87	39.4	10.4	4.5	3.0	4.6	64.0	104.0
1500 rpm (4 poles)																
AMPE 80Z XA	**4**	0.55	0.75	1440	3.8	75.6	80.7	80.8	0.75	1.30	6.0	2.8	2.5	2.6	1.4	8.2
AMPE 80Z AA	**4**	0.75	1	1435	5.0	80.7	81.5	82.5	0.74	1.8	5.5	2.7	2.6	2.8	2.5	11.0
AMPE 90S AA	**4**	1.1	1.5	1440	7.3	83.3	84.3	84.1	0.75	2.5	7.1	4.3	3.4	4.4	3.6	15.8
AMPE 90L BA	**4**	1.5	2	1430	10.0	84.1	85.2	85.3	0.72	3.6	6.6	4.3	3.8	4.4	3.7	16.4
AMPE 90L CA	**4**	1.8	2.4	1430	12.0	83.5	86.1	86.0	0.69	4.5	8.5	4.3	3.7	4.4	3.9	20.0
AMPE 100L AA	**4**	2.2	3	1455	14.4	83.2	86.2	86.7	0.63	5.9	7.2	3.7	3.0	3.9	5.9	22.8
AMPE 100L BA	**4**	3	4	1440	19.9	85.1	87.1	87.7	0.73	6.8	8.1	4.1	3.8	4.1	7.3	26.5
AMPE 112M BA	**4**	4	5.5	1450	26.4	87.2	88.3	88.6	0.80	8.2	8.5	2.7	2.4	3.5	16.4	36.0
AMPE 132S AA	**4**	5.5	7.5	1460	35.9	90.6	91.3	89.6	0.84	10.6	8.6	2.5	2.1	3.5	33.0	49.0
AMPE 132M BA	**4**	7.5	10	1465	48.9	90.8	91.5	90.4	0.84	14.2	8.6	2.5	2.1	3.5	36.0	54.0
AMPE 132M CA	**4**	9.2	12.4	1460	60.1	91.0	91.6	91.0	0.84	17.3	8.7	2.4	2.0	3.6	45.0	62.0
AMPE 132M DA	**4**	11	15	1470	71.1	90.6	91.5	91.4	0.80	21.8	8.7	2.4	2.0	3.6	57.0	71.0
AMPE 160M AA	**4**	11	15	1475	71.3	91.6	92.4	91.4	0.83	21.0	8.2	2.1	1.7	2.8	89.0	100.0
AMPE 160L BA	**4**	15	20	1465	97.8	92.2	92.7	92.1	0.83	28.5	7.8	2.3	2.0	3.1	105.0	105.0
AMPE 160L CA	**4***	18.5	25	1470	122	92.0	92.8	92.6	0.78	37.0	7.1	2.1	1.9	2.6	120.7	110.0
AMPE 160L DA	**4***	22	30	1470	143.9	92.4	93.1	93.0	0.81	41.0	8.0	2.2	1.9	3.0	128.1	115.0
AMPE 160L TA	**2***	22	30	2950	71.3	92.2	93.7	92.7	0.87	39.4	10.4	4.5	3.0	4.6	64.0	104.0
1000 rpm (6 poles)																
AMPE 80Z AA	**6**	0.37	0.5	940	3.8	70.9	72.1	73.5	0.72	1.0	2.7	1.6	1.6	2.1	1.8	8.0
AMPE 90S XA	**6**	0.55	0.75	940	5.6	73.4	77.2	77.2	0.67	1.5	4.5	1.6	1.5	1.8	4.8	15.0
AMPE 90S AA	**6**	0.75	1	940	7.6	78.1	79.2	78.9	0.62	2.2	4.6	1.7	1.6	1.8	6.0	18.1
AMPE 90L BA	**6**	1.1	1.5	935	11.2	79.1	81.2	81.0	0.64	3.1	4.2	1.8	1.7	2.3	6.5	19.0
AMPE 100L AA	**6**	1.1	1.5	965	10.9	78.9	81.3	81.0	0.70	2.7	6.2	2.2	1.8	2.8	8.9	21.5
AMPE 100L BA	**6**	1.5	2	965	15.6	78.5	83.0	82.5	0.64	4.4	5.7	1.7	1.3	2.3	10.7	25.0
AMPE 112M BA	**6**	2.2	3	920	22.8	83.3	85.1	84.3	0.68	5.4	5.3	2.0	1.8	2.4	20.1	34.2
AMPE 132S YA	**6**	3	4	975	29.4	84.1	85.8	85.6	0.65	8.0	5.5	2.1	1.9	3.1	37.7	42.0
AMPE 132M YA	**6**	4	5.5	975	39.2	85.2	87.1	86.8	0.70	9.6	5.4	2.2	1.7	3.2	44.4	46.0
AMPE 132M TA	**6**	5.5	7.5	975	53.9	87.1	88.1	88.0	0.64	14.2	5.4	2.1	1.8	2.9	54.1	48.0
AMPE 160M YA	**6**	5.5	7.5	975	53.9	87.5	88.5	88.0	0.77	11.8	8.6	2.2	1.8	2.8	103.0	84.0
AMPE 160LM ZA	**6**	7.5	10	980	73.1	88.3	89.3	89.1	0.78	15.7	8.7	2.4	1.9	3.1	132.0	97.0
AMPE 160L ZA	**6**	9.2	12.4	970	87.6	88.9	90.1	89.8	0.74	19.9	8.3	3.1	2.2	3.5	136.0	105.0
AMPE 160L TA	**6**	11	15	970	108.3	89.1	90.4	90.3	0.78	22.9	8.0	2.7	2.4	3.2	136.0	105.0

* Higher output (Progressive motor)

MECHANICAL DATA

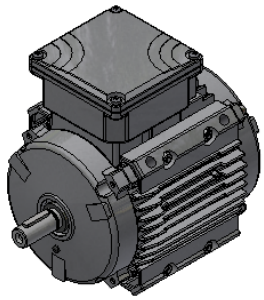

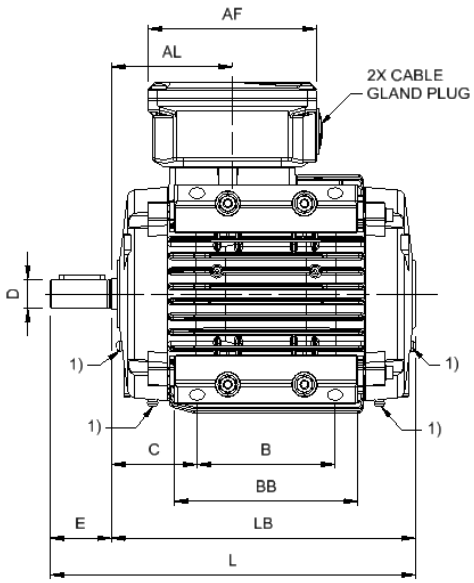

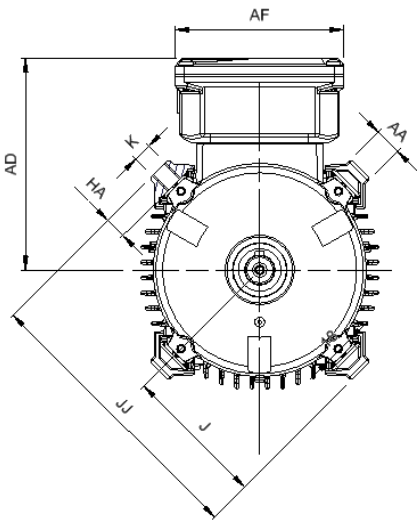

HPS RANGE – IE5

TYPE	kW	J	JJ	K	HA	AA	B	BB	C	L	LB	AF	AD	AL	D	E
90S-L	all	103	206	M12	13	24	90	114	61	285	235	110	147	85	24	50
90XL	all	103	206	M12	13	24	90	114	61	305	255	110	147	85	24	50
112M	all	125	250	M12	18	24	100	124	90	338	278	110	170	92	28	60
112XL	all	125	250	M12	18	24	100	124	90	361	301	110	170	92	28	60
132M	all	150	300	M16	20	35	140	175	109	425	345	133	194	121	38	80
132XL	all	150	300	M16	20	35	140	175	109	455	375	133	194	121	38	80
132XXL	all	150	300	M16	20	35	140	175	109	500	420	133	194	121	38	80
160M	all	180	360	M20	24	38	200	240	113	530	420	150	238	146	42	110
160L	all	180	360	M20	24	38	200	240	135	574	464	150	238	168	42	110

AMPE RANGE – IE3

TYPE	Poles	kW	J	JJ	K	HA	AA	B	BB	C	L	LB	AF	AD	AL	D	E
80	2-4-6	all	93	186	M12	14	18	90	120	56	238	198	110	138	79	19	40
90S-L	2-4-6	all	103	206	M12	13	24	90	114	61	285	235	110	147	85	24	50
90XL	2 4	3 1.8	103	206	M12	13	24	90	114	61	305	255	110	147	85	24	50
100	4-6	all	112,5	225	M12	15	24	100	124	83	324	264	118	154	92	28	60
112M	2-4-6	all	125	250	M12	18	24	100	124	90	338	278	110	170	92	28	60
112XL	2	7.5	125	250	M12	18	24	100	124	90	361	301	110	170	92	28	60
132S	2-4-6	all	150	300	M16	20	35	140	175	89	385	305	133	194	101	38	80
132M	4 6	7.5 4	150	300	M16	20	35	140	175	109	425	345	133	194	121	38	80
132XL	2 4 6	7.5 - 9.2 9.2 5.5	150	300	M16	20	35	140	175	109	455	375	133	194	121	38	80
132XXL	2 4	15 11	150	300	M16	20	35	140	175	109	500	420	133	194	121	38	80
160M	2-4-6	all	180	360	M20	24	38	200	240	113	530	420	150	238	146	42	110
160L	2-4-6	all	180	360	M20	24	38	200	240	135	574	464	150	238	168	42	110

WATER SLINGER

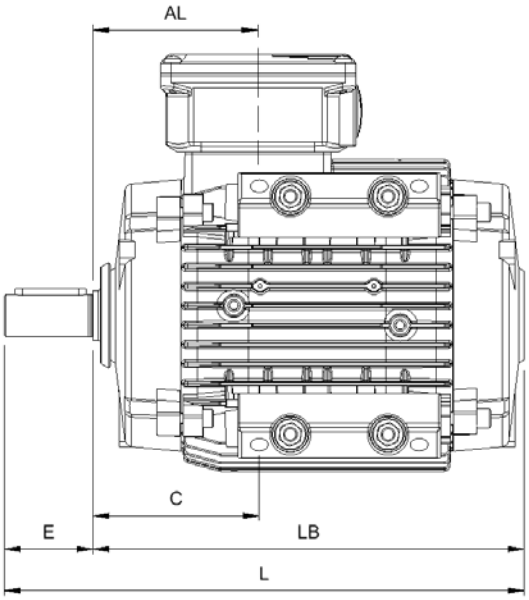

TYPE	C	L	LB	AL	D
80	62	244	204	85	40
90S-L	68.5	292.5	242.5	92.5	50
90 XL	68.5	312.5	262.5	92.5	50
100 P	88.5	329.5	269.5	97.5	60
112M	100	348	288	102	60
112XL	100	371	311	102	60
132S	89	385	305	101	80
132M	109	425	345	121	80
132XL	109	455	375	121	80
132XXL	109	500	420	121	80
160M	118	535	425	151	110
160L	140	579	469	173	110

FLAT LID

Upon request it is available the flat lid, please contact us for more clarification.

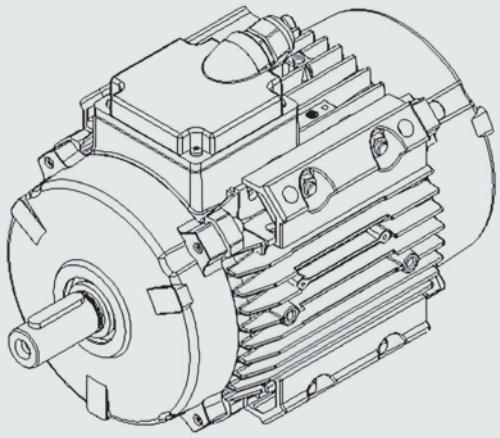

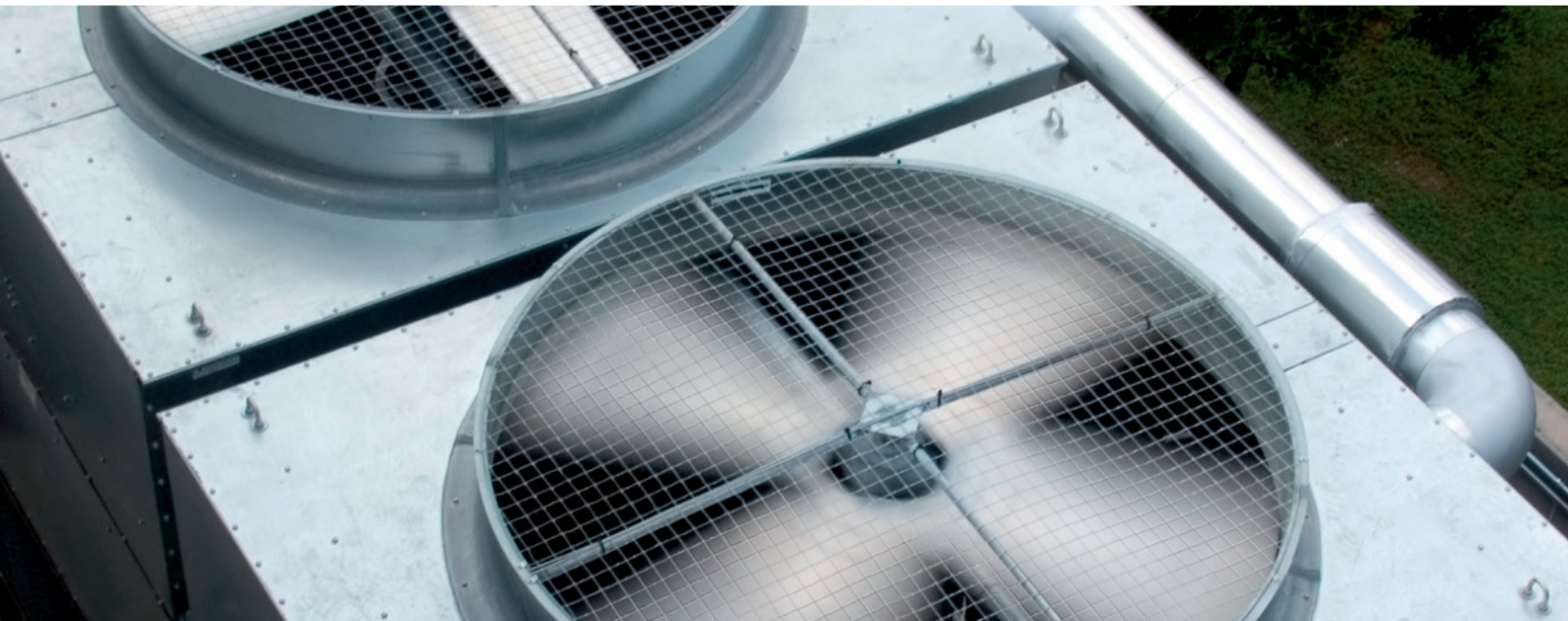

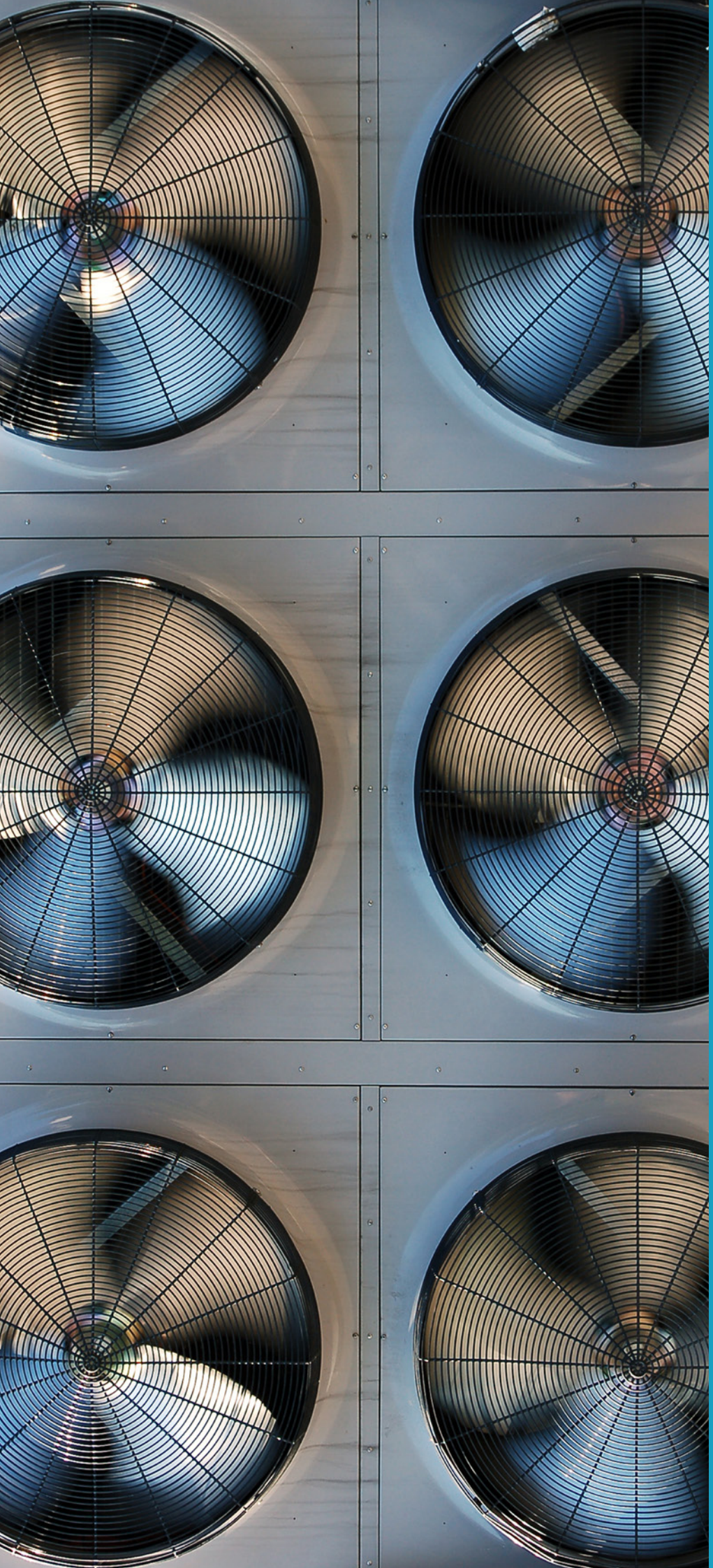

LAFERTGROUP
Member of Sumitomo Drive Technologies

Lafert S.p.A.
J. F. Kennedy, 43
I-30027 San Donà di Piave (Venezia), Italy
Tel. +39 / 0421 229 611
lafert.info@shi-g.com

www.lafert.com

Branches & Partners

Lafert GmbH
Wolf-Hirth-Straße 10
D-71034 Böblingen
Germany
Phone +49 175 550 4526
lge.info@shi-g.com

Lafert Electric Motors Ltd.
Unit 17 Orion Way
Crewe, Cheshire CW1 6NG
United Kingdom
Phone +44 / (0) 1270 270 022
luk.info@shi-g.com

Lafert Moteurs S.A.S.
L'Isle d'Abeau Parc de Chesnes
75, rue de Malacombe
F - 38070 St. Quentin-Fallavier
France
Phone +33 / 474 95 41 01
lfr.info@shi-g.com

Lafert Motores Electricos, S.L.U.
Polígono Pignatelli, Nave 27
E - 50410 Cuarte de Huerva (Zaragoza)
Spain
Phone +34 / 976 503 822
les.info@shi-g.com

Lafert N.A. (North America)
5620 Kennedy Road - Mississauga
Ontario L4Z 2A9
Canada
Phone +1 / 800/661 6413 - 905/629 1939
lna.info@shi-g.com

Lafert Electric Motors (Australia)
Factory 3, 117-123 Abbott Road,
Hallam - VIC 3803
Australia
Phone +61 / (0)3 95 46 75 15
info@lafertaust.com.au

Lafert Singapore Pte Ltd
48 Hillview Terrace #06-06
Hillview Building - Singapore 669269
Phone +65 / 67630400 - 67620400
info@lafert.com.sg

Lafert (Suzhou) Co., Ltd.
No.3 Industrial Plant Building Yue Xi Phase 3,
Tian E Dang Lu 2011, 215104 Wuzong
Economic Development Zone, Suzhou
China
Phone +86 / 512 6687 0618
lsu.info@shi-g.com

MKTG-10-248/23 dnaitalia.com